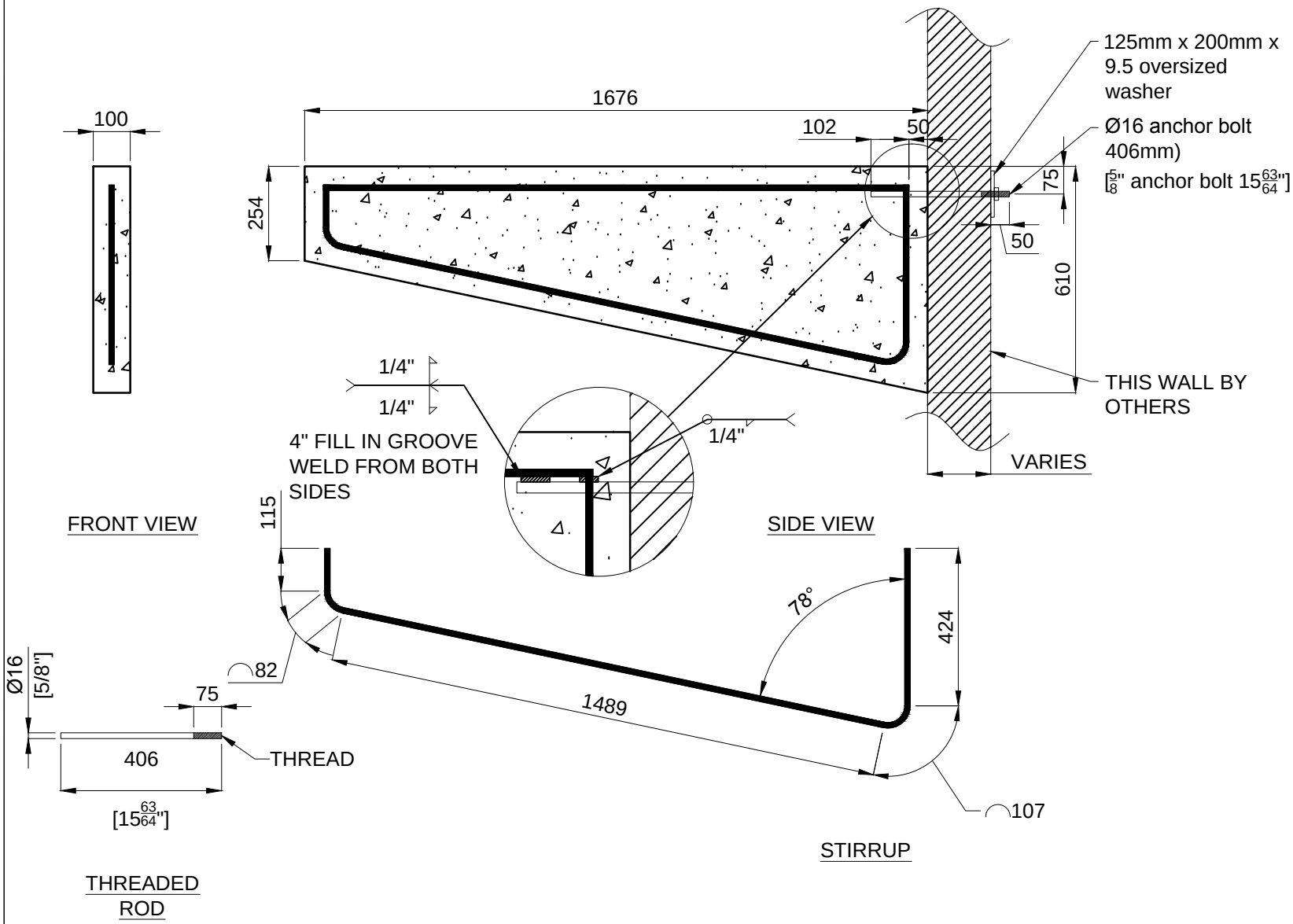

CONCRETE NOTES:

1.Design, mixing, placing and curing of concrete shall conform to CSA 23.1
2.Compressive Strength of concrete 32 MPA at 28 days minimum air content of 4%.
3.reinforcing steel to conform to CAN/CSA G30.18,Grade 400R
4.Clear cover to main reinforcement is 50mm.
5.Anchor Bolts,nuts and washers conform to ASTM A307
6.Weld to conform to CSA W59, 2003 comply with the CSA W47.1 Division 2.Use minimum 6mm fillet weld.
7.The bracket supporting wall shall be structurally stable and designed by others to capable to withstand the overturning moment from the bracket.
8.Any super imposed live load,snow load and dead load on top of bracket should not exceed the maximum load indicated in the table according to the bracket size and length.

CONCRETE INC.

11240 199 St., Edmonton,AB T5S 2C6
P:780-930-4232 F:780-425-4232
www.concreteinc.ca
email:info@concreteinc.ca

CONTRACTOR	-
PROJECT NAME	GENERAL
LOCATION	-

PRODUCTION

PROFILE NO.	BR2-A,B
TOTAL REQUIRED	-
TOTAL POUR DAYS	-
START POUR DATE	-

PRODUCTION STAMP SIGN

MOLD

PROFILE NO.	BR2-A,B
NO OF MOLDS.	2

FABRICATION STAMP SIGN

REBAR LIST

MARK	SIZE	SHAPE	No.	LENGTH	WEIGHT
BK66-R15-ST-1	15M		1	1576mm	2.5Kg
BK66-R15-BN-2	15M		1	2217mm	3.5Kg

INSERTS LIST

TYPE	No.	SHAPE
-	-	

DRAWING No.# BR-66" ST
FILE No.# BRACKET
Sales Order No.# -

CONCRETE	Volume (cu.m)	Mass (Kg)	Air Content
	0.07	184	5-7%
STRENGTH	Stripping (MPa)	28-days (MPa)	Rebar Grade
	12	32	400W

FINISH : SMOOTH GREY

HANDLING INSTRUCTIONS
USE FORK LIFT

REVISION NO.#	-
REVIEWED BY :	-
DATE :	-
SCALE :	1:16
SHEET NO.#	1 / 1
DRAWN BY:	ED
DATE:	2016-01-27